Quadro Jet Click

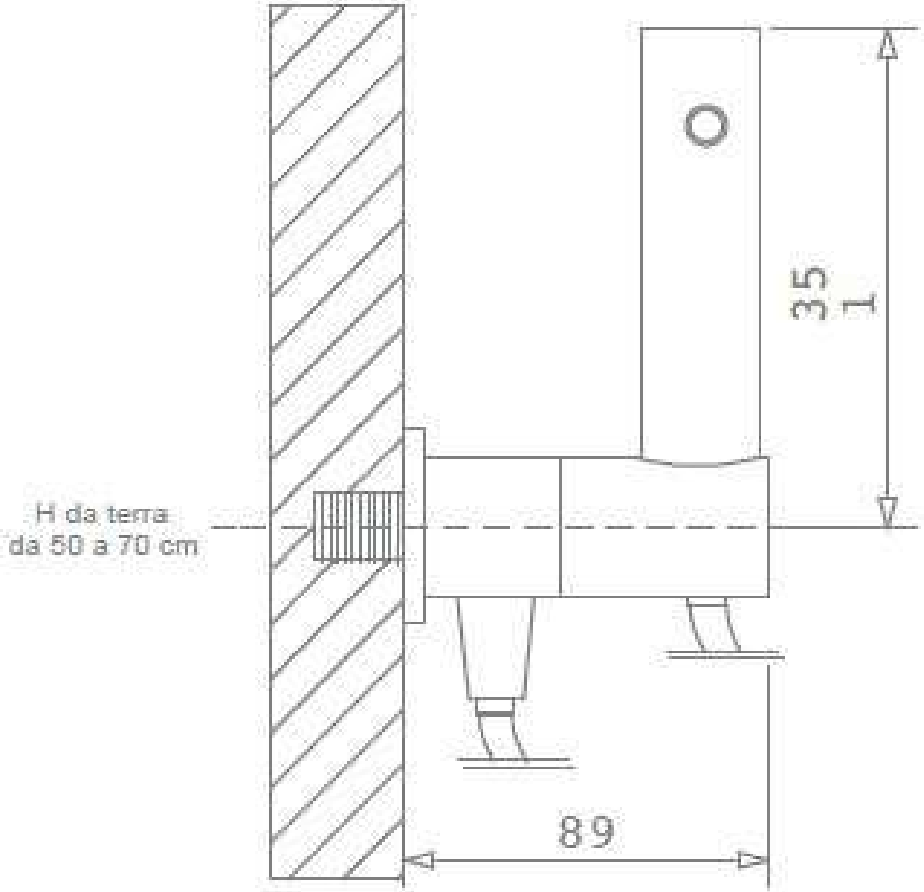

J3300

J3350